Panasonic Projector

PT-TW380/TX440/TX350

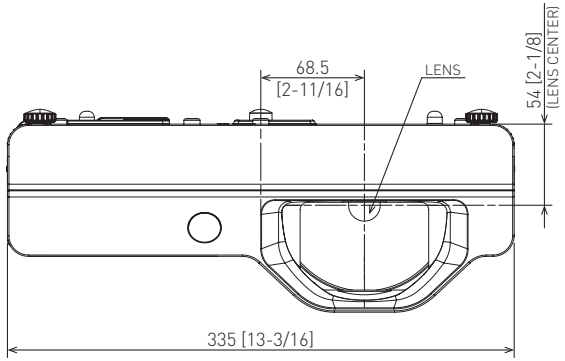

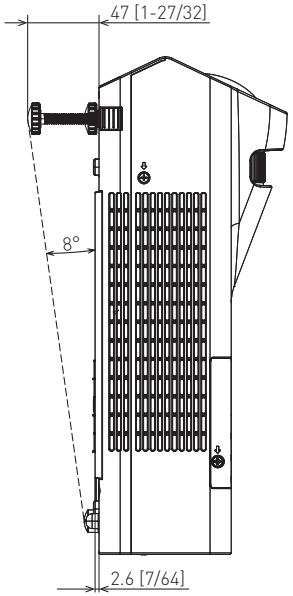

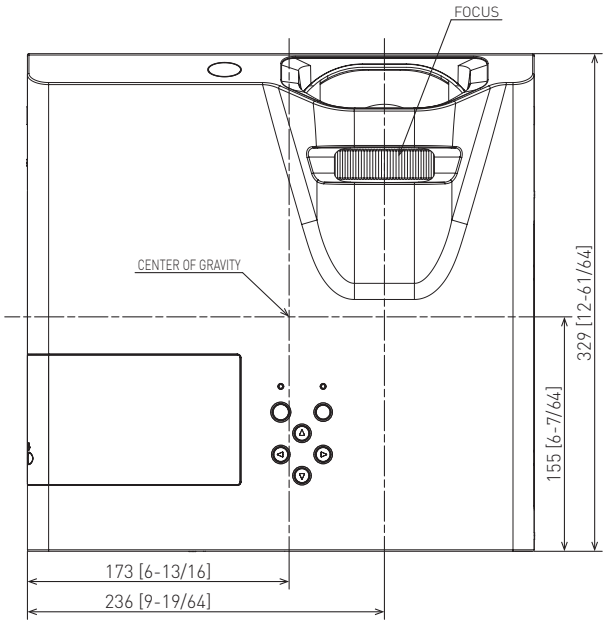

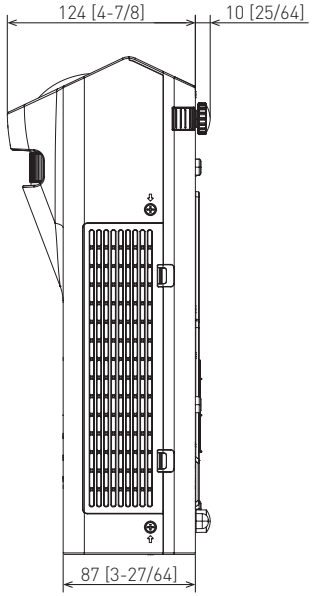

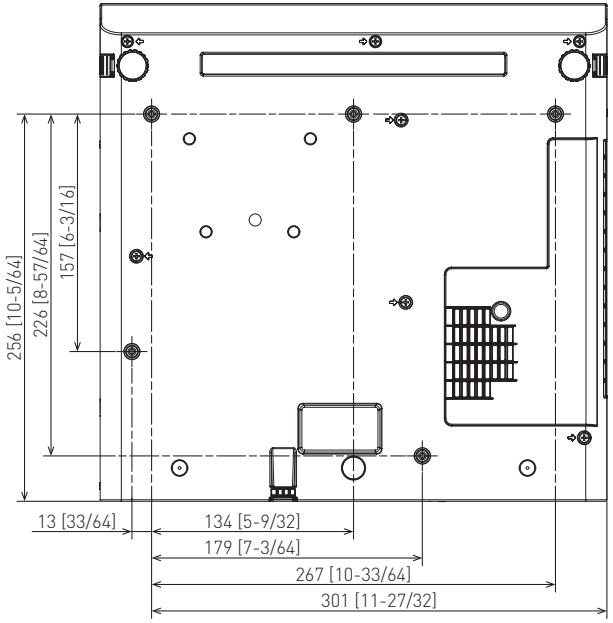

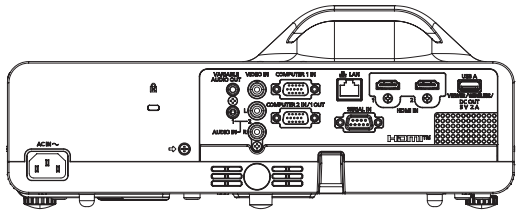

mm [inches]

Design and specifications subject to change without notice.

Feb 2020_01